DOCUMENT RESUME

ED 337 454 SP 033 367

AUTHOR	Bird, Tom
TITLE	Making Conversations about Teaching and Learning in an Introductory Teacher Education Course. Craft Paper 91-2.
INSTITUTION	National Center for Research on Teacher Learning, East Lansing, MI.
SPONS AGENCY	Office of Educational Research and Improvement (ED), Washington, DC.
PUB DATE	Aug 91
NOTE	22p.
AVAILABLE FROM	The National Center for Research on Teacher Learning, 116 Erickson Hall, Michigan State University, East Lansing, MI 48824-1034 ($4.60).
PUB TYPE	Viewpoints (Opinion/Position Papers, Essays, etc.) (120)
EDRS PRICE	MF01/PC01 Plus Postage.
DESCRIPTORS	*College Freshmen; *Educational Experience; *Education Courses; Education Majors; Elementary Secondary Education; Higher Education; Introductory Courses; Lesson Observation Criteria; Life Events; Preservice Teacher Education; Prior Learning; *Teaching Methods; *Writing Assignments
IDENTIFIERS	*Preservice Teachers; *Reflective Analysis

ABSTRACT

This paper focuses on freshman-level students expecting to major in teacher education. In their long apprenticeship of observation as students, preservice teachers have acquired both a mass of information about schoolteaching and a subjective warrant to teach. In the introductory teacher education course, "Exploring Teaching," the students' experiences appear as conceptions of school lessons which complicate their learning. In an attempt to cope with the situation, students have been assigned to write "conversations" about school lessons shown on videotape. In those conversations, the students cultivate several distinct voices: themselves as inexperienced teachers, as experienced students, and as each of several authors of their required readings. The writing assignments both organize and reveal interaction between students' prior conceptions of teaching, the videotaped teaching that they analyze and the arguments they encountered in their readings. Several ways are described in which the conversational procedure helps cope with the students' subjective warrant to teach. (LL)

****
* Reproductions supplied by EDRS are the best that can be made *
* from the original document. *
****

NCRTL
price
$4.60

ED337454

Craft Paper 91-2

Making Conversations about Teaching and Learning in an Introductory Teacher Education Course

Tom Bird

NCRTE

National
Center for Research
on Teacher Education

U.S. DEPARTMENT OF EDUCATION
Office of Educational Research and Improvement
EDUCATIONAL RESOURCES INFORMATION CENTER (ERIC)

☐ This document has been reproduced as received from the person or organization originating it

☐ Minor changes have been made to improve reproduction quality

• Points of view or opinions stated in this document do not necessarily represent official OERI position or policy

"PERMISSION TO REPRODUCE THIS MATERIAL HAS BEEN GRANTED BY

M. Kennedy

TO THE EDUCATIONAL RESOURCES INFORMATION CENTER (ERIC)."

Sponsored by the United States Department of Education
Office of Educational Research and Improvement

BEST COPY AVAILABLE

51633367

Craft Paper 91-2

MAKING CONVERSATIONS ABOUT TEACHING AND LEARNING IN AN INTRODUCTORY TEACHER EDUCATION COURSE

Tom Bird

Published by

The National Center for Research on Teacher Learning
116 Erickson Hall
Michigan State University
East Lansing, Michigan 48824-1034

August 1991

This work is sponsored in part by the National Center for Research on Teacher Learning, College of Education, Michigan State University. The National Center for Research on Teacher Learning is funded primarily by the Office of Educational Research and Improvement, United States Department of Education. The opinions expressed in this paper do not necessarily represent the position, policy, or endorsement of the Office or the Department.

National Center for Research on Teacher Learning

The National Center for Research on Teacher Learning (NCRTL)[1] was founded at Michigan State University in 1985 with a grant from the Office of Educational Research and Improvement, U.S. Department of Education.

The NCRTL is committed to research that will contribute to the improvement of teacher education and teacher learning. To further its mission, the NCRTL publishes research reports, issue papers, technical series, conference proceedings, and special reports on contemporary issues in teacher education. For more information about the NCRTL or to be placed on its mailing list, please write to the Editor, National Center for Research on Teacher Learning, 116 Erickson Hall, Michigan State University, East Lansing, Michigan 48824-1034.

Director:	Mary M. Kennedy
Associate Director:	G. Williamson McDiarmid
Program Directors:	Linda Anderson, Deborah Ball, G.W. McDiarmid
Director of Dissemination:	Cass Book
Project Manager:	Anne Schneller
Editor:	Sandra Gross

Many papers published by the NCRTL are based on the Teacher Education and Learning to Teach Study (TELT), a single multisite longitudinal study. The researchers who have contributed to this study are listed below:

Marianne Amarel
Deborah Loewenberg Ball
Joyce Cain
Sandra Callis
Barbara Camilleri
Anne Chang
David K. Cohen
Ada Beth Cutler
Sharon Feiman-Nemser
Mary E. Gomez
Samgeun K. Kwon
Magdalene Lampert
Perry Lanier
Glenda Lappan
Sarah McCarthey
James Mead
Susan Melnick
Monica Mitchell
Harold Morgan
James Mosenthal
Gary Natriello
Barbara Neufeld
Lynn Paine
Michelle Parker
Richard Prawat
Pamela Schram
Trish Stoddart
M. Teresa Tatto
Sandra Wilcox
Suzanne Wilson
Lauren Young
Kenneth M. Zeichner
Karen K. Zumwalt

[1]Formerly known as the National Center for Research on Teacher Education (1985-1991). In 1991 the Center was renamed.

Abstract

In their long apprenticeship of observation as students, preservice teachers have acquired both a mass of information about schoolteaching and a subjective warrant to teach. In my introductory teacher education course, the students' experiences appear as conceptions of school lessons which complicate their learning and my teaching. In the attempt to cope with the situation, I have assigned students to write "conversations" about school lessons shown on videotape. In those conversations, the students cultivate several distinct voices: themselves as inexperienced teachers, as experienced students, and as each of several authors of their reading. The writing assignments both organize and reveal interaction between students' prior conceptions of teaching, the videotaped teaching that they analyze, and the arguments they encounter in their reading. In several ways that I will describe, the conversational procedure helps me to cope with the students' subjective warrant to teach.

MAKING CONVERSATIONS ABOUT TEACHING AND LEARNING IN AN INTRODUCTORY TEACHER EDUCATION COURSE

Tom Bird[1]

Promoting Conversations About Schoolteaching

For the past five quarters, I have taught a section (25-30 students) of my department's introductory teacher education course which is called "Exploring Teaching." This freshman-level course is required of all elementary education majors in our department; some students who are seeking admission to our secondary teacher certification programs also enroll. Most of the students who take the course, the majority of which are white women aged 18-22, express a firm commitment to schoolteaching, and many of them are admitted to one of the department's teacher education programs.

At the beginning of the course, I tell the students that its main goals are to help them to notice and examine ideas about schoolteaching that they bring with them to teacher education, to help them to decide whether they want to agree with those ideas, to provide them with diverse images of schoolteaching, and to introduce them to several ways of thinking and talking about that work. In my syllabus, I indicate that I want to begin the students' induction into the educational conversation that I and my colleagues are trying to have in the teacher education program and in schools.

The first order of business in the course is to capture the students' "inner attention" (Dewey, 1964) and their willing cooperation in course activities. For that purpose, I have organized the course around three (sometimes four) videotapes that show diverse school lessons on several subjects in Grades 3, 5, and 8. The tapes do seem to catch the students' attention, perhaps because they connect with the students' own questions: How should I teach? or, in connection with a given tape, Should I teach *this* way? I show each tape twice. During and after the first showing, I ask students to take notes and have small-group discussions that I hope will help them to notice and record the ideas they already have about teaching and to notice each other's arguments.

To further inform the students' discussions, I match each tape with an educational essay or research article that both raises some problem of schoolteaching and provides vocabulary for talking about the lessons on tape. Between showings of the videotapes, we study these articles and essays closely with the goal of mastering them well enough to use them specifically and faithfully to talk about the taped lessons. I hope to start and mediate

---

[1]Tom Bird, assistant professor of teacher education at Michigan State University, is a senior researcher with the National Center for Research on Teacher Learning.

a conversation among the students and between them and the authors of their reading about the videotapes of teaching that I show in the class. The second showing of each tape helps students to correct and extend their initial description of the lesson. In class, we discuss how the arguments and vocabulary in the reading might apply to that lesson. As the quarter proceeds, we acquire a set of shared cases and shared ways of talking about them.

To complete the work and help me evaluate the results, I ask students to *write* a conversation about each taped lesson in which they employ three distinct voices: themselves speaking as inexperienced teachers, themselves speaking as experienced students, and themselves speaking as the author of the writing that we discuss in relation to the tape. I developed this conversational assignment after reading Diane Holt-Reynolds's (1990) paper on dialogue as a strategy for helping preservice teachers to reconstruct their experience as students. One advantage of this writing format, in my mind, is that it relieves the students of any need to pretend that they believe or agree with the authors of their readings. They can demonstrate their understanding while preserving and expressing their own positions, if they wish to.

Perhaps because the videotapes that I use in the class show school lessons, the students' prior experience of schoolteaching often appears to be organized as conceptions of lessons: How they should proceed from start to finish and what makes them effective or ineffective, desirable or undesirable. Below, I will report the students' reactions to the tapes as a way of sketching the conceptions they hold. For most of the generalizations that I will offer, there are important exceptions; as a teacher, I often have been grateful that there were alternative views to enliven small- and whole-group student discussions.

Taken together with my experience in teaching the introductory course in the manner just described, some recent writing about the thoughts and thought processes of preservice and experienced teachers leads me to speculate that preservice teachers (and experienced teachers in retrospection) have some good reasons for regarding a university teacher education course as an annoying detour from their work of becoming teachers. I conclude the paper with my suspicion that conducting the introductory course as I do helps both to reduce that annoyance and to increase the perceived value of the intellectual resources that the university has to offer.

Three Conversations About School Lessons

In the introductory course, students' prior conceptions of schooling and teaching appear to me as ideas about school lessons or, more specifically, as reactions to the diverse lessons that I show them. From those reactions, I form impressions of their encounter, not

only with the tapes but also with the essays and articles that I would like them to understand and employ as resources for thinking and talking about teaching. In reflecting on those impressions, I am trying to expand and refine my "pedagogical content knowledge" (Shulman, 1987), that is, my knowledge of the problems that students have in learning the particular ideas and arguments that I wish to teach them and of the ways in which I might represent those ideas and arguments more effectively.

Students' Reactions to a Direct Instruction Lesson

In the winter quarter of 1991 the first tape showed an eighth-grade English class taught by direct instruction. The objective for the lesson, which the teacher wrote on the chalkboard and stated aloud, was to teach the students to "put style into their complex sentences." After reviewing the definition and parts of complex sentences, the teacher wrote a student's sentence on the board: "Because Houdini was a magician, he was always making up stunts." She then demonstrated how the sentence might be improved by choosing adjectives to modify "magician" and "tricks" and by replacing "making up" with other verbs. In the course of this demonstration, she asked students to suggest adjectives and verbs and visibly screened student suggestions as well as providing her own. The result, mostly of her suggestions, was "Because Houdini was a daring magician, he was always inventing dangerous, death-defying stunts." For guided practice, the teacher then had students write complex sentences and revise them in ways that she had just demonstrated. Throughout the lesson, the teacher maintained a brisk pace organized by frequent, specific instructions and close monitoring, all carried out in an agreeable manner.

Asked to rate the lesson by picking a number between 1 (bad lesson) and 10 (excellent lesson), most of my students this quarter chose 5, 6, and 7. In the past, many students have rated the lesson better. Some have chosen numbers 9 and 10 and have written about the lesson and the teacher in glowing terms that suit a heroine. Some students have said or written that the videotaped teacher reminds them of one of their own teachers whom they greatly admired. I use the tape because it stimulates the students to express, in positive terms, some of the ideas about teaching that they already hold and because the lesson is vulnerable to arguments that we will read later in the course. One way that I gauge progress in the course is by asking whether and how the students' reactions to this videotaped lesson become more complicated as the quarter proceeds.

I matched this tape with Barak Rosenshine and Robert Stevens's (1986) chapter on direct instruction in the *Handbook of Research on Teaching*. Both in small groups and as a whole class, we read important passages from the chapter together and discussed the

chapter extensively, with the goal that the students would be able to use its arguments and language to talk about the eighth-grade writing lesson. Although I had not used this chapter in the past, I included it this quarter for three reasons. First, since the English teacher had received extensive training in direct instruction, the chapter might be read as though it were her explanation of what she was doing; that would tend to enrich the case. Second, I expected that the chapter would provide students with a vocabulary to express and refine their opinions of and intuitions about the lesson. Third, I hoped that experience would provide them a reason to believe that anything written by a professor might be worth reading and useful to their teaching.

After we viewed and discussed the tape for the second time, in relation to the reading, the students wrote a conversation about the videotaped lesson. They used three voices: Myself as Inexperienced Teacher, Myself as Experienced Student, and Myself as Barak Rosenshine. While they expressed some doubt about what I wanted, their papers looked very much like conversations; the voices were distinct and interactive. Generally, students were able to use the language of their reading with a fair amount of facility, and most did so with seeming enthusiasm. In many of these conversations, Myself as Experienced Student and Myself as Barak Rosenshine teamed up to explain to Myself as Inexperienced Teacher why the closely managed "step-by-step" procedure of the lesson was a good way to teach.

Some students noted Rosenshine and Stevens's caveat that direct instruction is best suited to "well-structured topics," but none made much of that warning. A few students quarreled with the lesson on various grounds; one complaint was that the teacher was arbitrary in her acceptance or rejection of students' suggestions for rewriting the Houdini sentence. I filed that information away for a later use, which I will describe below. No student asked whether the writing task of "putting style in complex sentences" was well structured or ought to have been treated as one by the teacher in the tape. I planned to come back to that question later in the quarter, after some other reading.

I infer that the direct instruction lesson in many ways approximates the students' images and conceptions of good teaching, that Rosenshine and Stevens's description of direct instruction lessons and their "step-by-step" rationale for direct instruction are compatible with many students' prior conceptions of teaching, that the vocabulary of the chapter provides them with a means to express and refine their views, and that many of them feel that they had been both confirmed and informed by the tape and chapter.

Reactions to an Open Classroom

The second videotape documented an open classroom for second and third graders. In her current unit, the teacher had organized a variety of activities around a theme of "Ancient Egypt"; the unit culminated in both a class visit to the Tutankhamen exhibit when it visited the city, and a funeral modeled on Egyptian practices for two pet snakes that had died in the classroom. The classroom had no desks for the teacher or the students; it had tables and other places to work. The documentary showed students scattered or moving about the classroom writing newspaper articles, writing in journals, reading while lying in a hammock or on a rug, making up mathematical games about exploring tombs, making prints, planning the funeral for the snakes, and so on. While the teacher visibly took charge in a couple of scenes to assure herself that students had chosen activities and were working on them, she was more often seen in the background working with one or two students

Many of my students said and wrote that the open classroom appeared to be fun for the third graders, who probably learned various social skills of working together, negotiating, working out conflicts, and so on. Some thought that Egypt was worth studying and that the students might be learning something about it. Many noticed the teacher's report that the open classroom students scored as well as students from conventional classrooms on the city's reading tests. Most, however, were skeptical that the students were learning what they "need to learn." They doubted that the students could be learning since the teacher was "not teaching" them. Some of my students used the word "chaos" to describe the open classroom, even as they acknowledged the social learning. Some said that the open classroom had virtues but was "not my style." Or they suggested that, in their teaching, they would mix a bit of the open classroom with direct instruction. It appears that the absence of desks; the low visibility of the teacher; and the seeming absence of "teaching" on reading, writing, and arithmetic all violate their conception of school lessons.

I matched the open classroom videotape with a mainstay essay in the syllabus for the course: David Hawkins's (1974) essay on relationships among the student, the teacher, and subject matter. The essay makes arguments that can be taken as rationales for the open classroom, for example, that teachers should afford students a choice of involvements with interesting materials and activities in order to gain their genuine involvement in learning. Similarly, the open classroom provides concrete images that can help my students to understand the essay's argument, for example, what it means to provide an environment that is rich in choices. As before, we worked hard to master the essay's argument and vocabulary, aiming at using them to talk about the open classroom. One of the small joys of orienting the course to the tapes is that it provides this opportunity to treat a

philosophical essay as practical talk about teaching (which, I reckon, Hawkins intended it to be).

While my students gained some ability at stating Hawkins's argument and applying it to the open classroom, they also had problems with it. For example, starting from a premise that people don't amount to much separated from their involvements with the world, Hawkins then argues that the first act of teaching is to get the students "going on their own," that is, involved in projects that they choose and with which they are deeply engrossed. Then, Hawkins argues, the teacher can get information about the students and so decide how best to provide for their education.

The teacher gets the students going on their own by "trapping" them, that is, by providing an array of potentially interesting and educative things and activities among which the students exercise choice. While my students tended to accept Hawkins's argument as such, they were put off by its referents in the open classroom. In the written conversation about the open classroom, both Myself as Experienced Student and Myself as Inexperienced Teacher were likely to say that choice created "chaos." Sometimes, Experienced Student argued that students provided with choice will mess around and avoid learning anything that they need to learn. Seemingly, many of my students were unable to discern or describe any basis for productive classroom order other than the teacher's close supervision of student activity.

Reactions to a Mathematical Discussion

The third videotape showed a class of fifth graders engaged, with the assistance and guidance of their teacher, in a mathematical discussion. The teacher had shown her students a videotape in which some marine scientists dropped an "XBT" probe over the side of their vessel and used the data returning from the probe to construct graphs of the water's temperature, by depth. The teacher provided students copies of these graphs; Figure 1 shows one of them. The teacher began a discussion by asking students what they could tell from the graphs. Her students began to make arguments about the meaning of the graphs and to give their reasons. The teacher moderated the discussion by repeating and summarizing students' arguments, asking students to comment on each other's arguments, calling attention to differences of opinion among the students, and raising new questions about the graphs' construction and meaning.

Early in the 45-minute period, some students began expressing the conventional understanding that the graph lines showed the relationship between the temperature and the depth of the water. Some other students, including the last student to speak, stated the

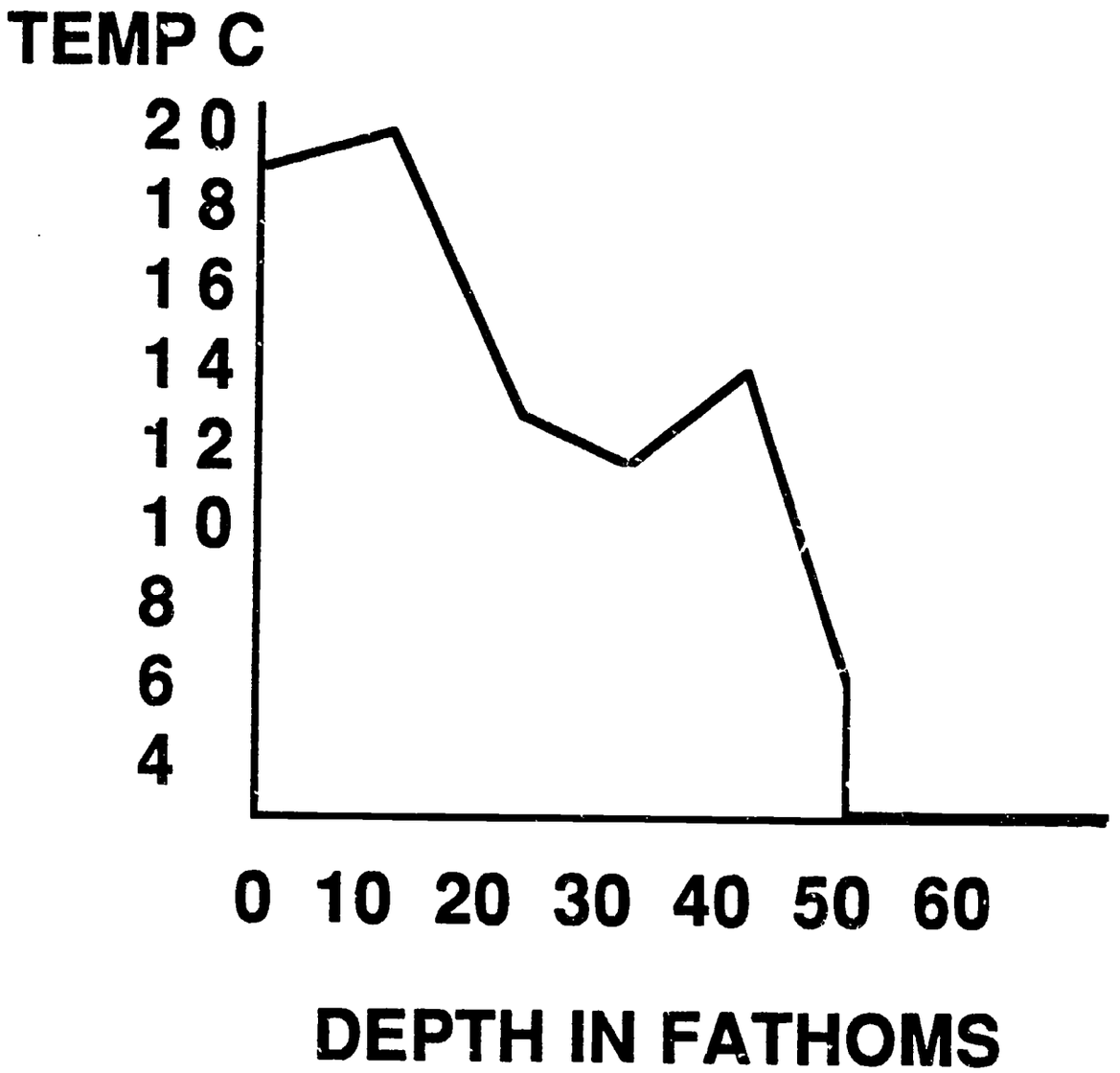

Figure 1. The graph discussed in Lampert's class.

unconventional understanding that the graph lines showed the physical path of the probe through the water. It appeared that the latter students think of the graphs as maps.

Throughout this activity, the math teacher gave her students many indications of how they should act in conversation but few indications of what they should think or say about the graphs. Near the end of the lesson, she attempted to help students sort out their thinking by juxtaposing three representations of the situation in which the marine scientists made their graphs. One of these representations was the graphs themselves. The second was a table of ordered pairs of temperature and depth readings, which the teacher asked students to reconstruct by reading from one graph. The third was a diagram, sketched on the chalkboard, which showed the research vessel on the surface of the water and the ocean floor below, connected by a vertical line marked off in 10-fathom segments. My impression was that she wanted the students to work out, for themselves, that those three representations were both different and related.

I matched that videotaped lesson with "Mathematics Learning in Context" by Magdeline Lampert (1985), who was also the teacher in the videotape. In her article Lampert argued that to be able to use mathematics students must learn not only to perform calculations but also to *understand* why and when they would perform those calculations as well as what they could expect to achieve in doing so. She argued further that students can attain that understanding more surely and readily if they encounter mathematical problems in the context of real-life problems, which provide information they can use to test their mathematical thinking, and if they are encouraged and helped to reason through the mathematics for themselves. I wanted my students to understand Lampert's argument, to employ it to interpret Lampert's lesson, and to consider the possibility that Lampert's conduct of the lesson was reasonable, albeit quite different from most of their own experience in school.

I pursued these results by engaging my students in a discussion that I attempted to lead in the same manner as Lampert led the discussion among her students. I taught that lesson better in the winter quarter 1990 than in the spring 1991; also, I documented the earlier lesson with videotape and notes. At what I believe to be a small risk of ecological error, I will describe the earlier lesson here. That lesson proceeded in three stages, each initiated by a question or task that I put to the students.

The first stage was to solicit their reactions to Lampert's lesson. Many of my students said (and later wrote) that they approved of the first few minutes of this lesson, on the grounds that Lampert was making the fifth graders figure things out for themselves. As Lampert's lesson went on, however, most of my students became more and more

uncomfortable. They said that the fifth graders were "struggling" with the graphs and "getting restless"; that the youngsters didn't understand or didn't know what they were doing; and that the teacher should have stepped in and set them straight, gotten them back on the right path, and let them know how they were doing. By the end of Lampert's lesson, few of my students still approved of it. Many of them argued that she should have started the lesson differently so as to avoid the many problems that, in their view, she had encountered.

In the second stage of my lesson, I pursued the students' argument by asking them to tell me how to revise Lampert's lesson. I would be the mathematics teacher; they would be both my students and my advisors. They would tell me how to teach them. They wanted to turn Lampert's lesson around. They proposed that we should move her work at the end of her lesson to the beginning, where it would serve as a clear "explanation" rather than, as they described it, a hasty effort to sort things out at the end.

Guided by one student, I began drawing on the chalkboard, first putting up the diagram of the boat on the surface, the ocean floor below, and the vertical line connecting them. Later, again at student suggestion, I added the temperature and depth labels to produce Figure 2. After some hesitation, other students began to protest that such a drawing would give students the wrong idea. (It certainly would. Figure 2 superimposes a diagram of spatial relationships on a graph of temperature by depth, making nonsense of the graph labels and rendering the meaning of the graph line quite ambiguous.) However, no one immediately gave me a clear explanation of why we had erred. One student proposed that the figure would be confusing because students think of depth as being up and down, while depth is shown on the horizontal boat in the XBT graph and the figure we had on the chalkboard.

As the discussion proceeded, I tried to operate as Lampert had, by drawing out and summarizing my students' different arguments and reasons. I erased the ambiguous Figure 2, separated the diagram of spatial relations from the graph of temperature by depth, and drew the two side by side for comparison. I asked students to reconstruct a table of ordered pairs from the graph and wrote that table on the board beside the diagram and the graph. By going back and forth between the list of ordered pairs, the graph, and the diagram, we slowly sorted out the meaning of these different but related representations. We had a small success in mathematical understanding—by Lampert's methods.

However, participating in that success did not obviously transform my students' opinion of Lampert's lesson. Many were still inclined to think that she should somehow have begun by telling and showing. As in previous quarters, my students were inclined to revise Lampert's lesson by removing most of the "confusing" information that Lampert's fifth

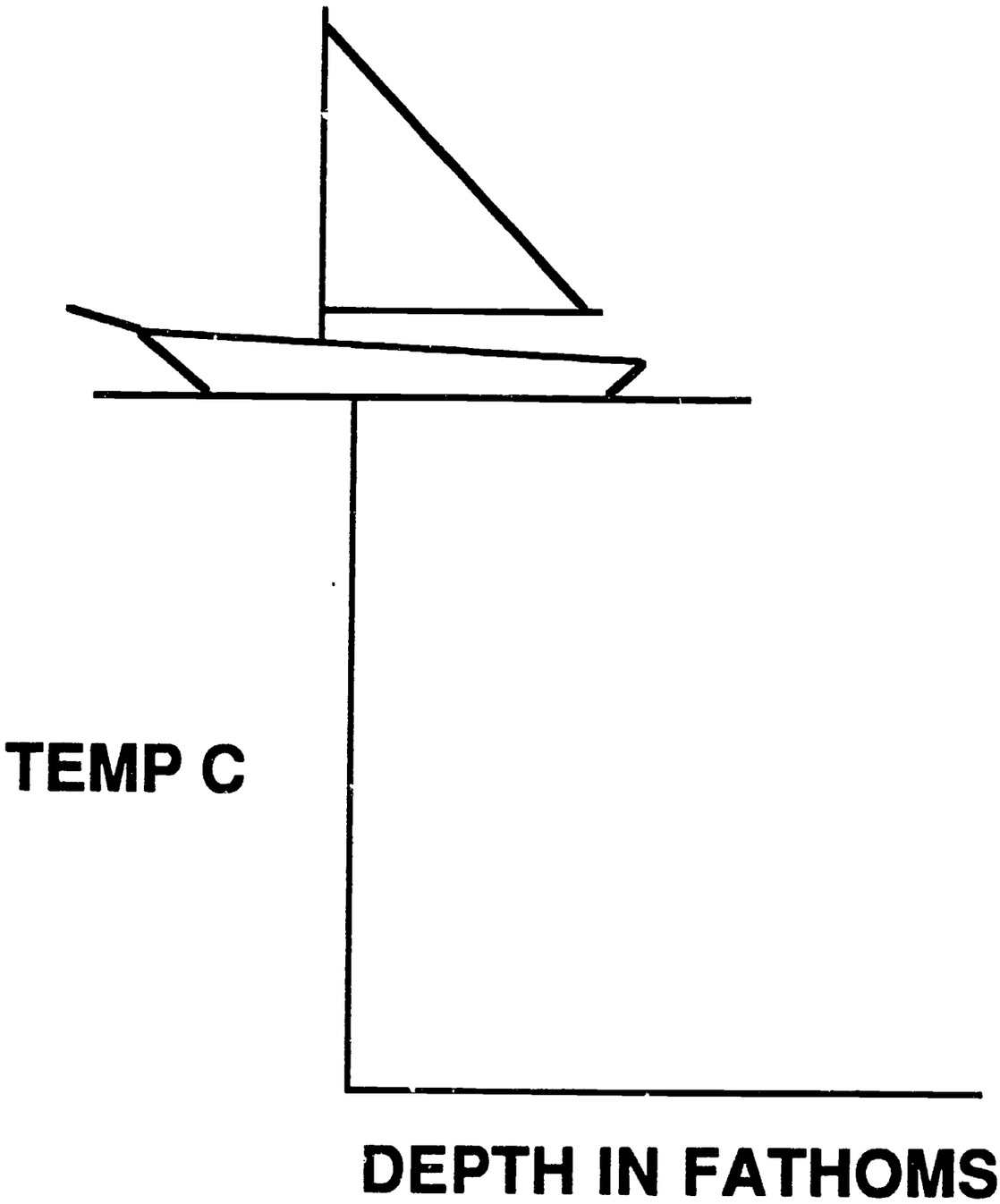

Figure 2. The picture some students wanted to draw.

graders had "struggled" with. Thus, they would take the graphs out of the context of a real-life problem and would deprive students (including themselves) of the information that they could use to reason about the graphs on their own. Moreover, they would have had Lampert tell her students throughout the "discussion" whether they were "on the right track." Such feedback, they tended to say, would "encourage" the fifth graders. Pressed on the latter point, some of my students acknowledged that telling the fifth graders "how they were doing" might have brought their discussion (and reasoning) to an immediate halt. Asked whether their own "struggles" with the graphs had caused them much distress, my students said "No," but were somewhat unwilling to extend that generalization to Lampert's students.

In relation to my aim of helping my students understand, apply, and credit Lampert's reasoning about teaching, I was still in a tenuous position. I concluded my lesson on Lampert's article and lesson by asking my students to give them a friendly reading: "How *could* it have been reasonable for Lampert to proceed as she did?" My students reported readily that Lampert's lesson could have been reasonable if she placed a high premium on students' learning to cope with real-life problems and figuring things out for themselves. *But*, they said, the lesson would have been *better* if Lampert had started the lesson by giving the students some explanation of the XBT graphs. They still were having considerable difficulty squaring Lampert's arguments and teaching with their prior ideas about how a school lesson ought to go.

Interactions Among the Tapes and Readings

As we near the end of the winter term, we have built up a small common stock of videotaped cases and arguments about them. Some relationships among the tapes and arguments afforded the students additional opportunities to test their own thinking, to appreciate the arguments in their readings, and to credit some of the teaching that is unfamiliar to them. For example, students have some grasp of Lampert's argument about the importance of providing context for mathematics problems, but they still quarrel with the way her lesson goes. At the same time, I have filed away their earlier objection to the direct instruction lesson: The teacher was arbitrary in accepting or rejecting student's suggestions for revising the sentence about Houdini. That is, she provided her students no good reasons why she accepted or rejected their proposals for revision, relative to her own. As part of a final exercise intended to advance and consolidate learning in the course, I show the direct instruction lesson again and remind the students of their objection to it. I propose that Lampert's argument about learning in context provides them with a means to express their objection more powerfully and specifically.

In the past, they have been able, with a little help, to mount the criticism that the English teacher has taken the task of revising the sentence out of context. That is, she has not said who is writing to whom for what purpose, so she has little basis for arguing that her revisions are superior to the students' revisions. Lacking the context, her students have only a limited understanding of why one version of the sentence might be preferable to another. By inviting my students to make this criticism, I hope both to consolidate their understanding of Lampert's argument and to complicate their appraisal of the direct instruction lesson.

The students can pursue such connections in their final writing assignment, which is a multivoiced conversation about the direct instruction lesson with which we began the course. The students are to produce five voices in those conversations: Myself as Inexperienced Teacher, Myself as Experienced Student, Myself as Barak Rosenshine, Myself as David Hawkins, and Myself as Magdeline Lampert. In producing those voices and the interaction among them, the students will have ample opportunity to show their understanding of their reading, to restate or refine the arguments they brought with them to the course, and, perhaps, to change their minds.

Calling on prior experience, I expect these conversations to be interesting, sometimes disheartening, and sometimes exhilarating to read. I hope to see evidence that the students have increased their ability to participate in and profit from the remainder of their teacher education programs. I think about the potential effect on their *teaching* only as a means to orient my work in the course; considering the power of their prior experience, the distance they have to go, and the probable conditions of their induction to teaching, any direct claim about my class and their teaching seems ridiculous.

Working With Preservice Teachers' Experience

In Dewey's (1938) terms, it is rather more clear that my students' experience is *continuous* than it is shaped by *interaction* in my class. Throughout the discussions of the videotaped lessons, they return again and again to a familiar image for a school lesson. In that image, a lesson begins when the teacher tells or shows her students sometning that they should understand or do. The telling and showing are kept simple, so that the students will face no unnecessary complications. The teacher then sets the students to some kind of "discussion" or practice, throughout which she consistently or constantly provides the students feedback on how they are doing. The students should not "struggle," but should move as

easily and quickly as possible to "the right answer," which the teacher has had in mind all along and has worked steadily to reproduce in her students. Throughout the class, the teacher is alert, in charge, and interesting, so as to avoid "chaos" and minimize "restlessness."

I suppose that the students' image of a school lesson, along with some generalizations that they use to justify it, is a prominent feature of their "conceptual ecology" (Anderson, 1987). So to speak, most (or all) ideas that I wish to introduce into my students' thinking must collaborate, coexist, or compete with the conceptual organisms that are already thriving in their intellectual landscapes. The introductory course presents to me a series of practical problems such as the following: How, given their prior conceptions of school lessons, could I help my students to discover reason in Lampert's approach to and arguments about the teaching of mathematics?

As I work at such problems, I am constantly grateful that we have the videotaped lessons to talk about. Our joint effort to understand and evaluate those lessons makes the course seem "practical" to the students; the course obviously is about schoolteaching. I face no need to justify our reading of scholarly work; we discover (or fail to discover) that the reading is relevant to and helpful in discussing the lesson we have seen. When students make proposals about what makes a good lesson, we often can test them by asking how the teacher in a given tape might have proceeded otherwise and by projecting the possible consequences of the proposed adjustment. The students are not so wedded to their ideas that they are unwilling even to consider that a videotaped lesson might make sense; when asked to give it a "friendly reading," they will attempt to do so, but they often find that they lack the vocabulary to give an affirmative and specific account. At that point, the vocabulary and arguments of the course reading might enter into their thinking.

However, making sense of the reading presents its own set of difficulties. I find it a challenge to help the students understand the arguments in the essays and articles well enough that those arguments *could* compete with the familiar and ready explanations that the students already hold. Each time I have taught the introductory course, I have reduced the amount of reading, increased the intensity with which we study it, complicated and refined my repertoire for helping students to understand it, and raised my expectations for that understanding.

The written conversations about the videotaped lessons promote that understanding and also test it. When a student understands each article or essay well enough that she can produce a voice that sounds like its author and when that author's voice can argue with Experienced Student, I am pleased. Students report, in a paragraph at the end, how it was to write each conversation. Their remarks indicate that they are aware of the test and

regard it to be reasonable. When the students are frustrated by their attempts to write the conversations, they are likely to say that it was because they didn't understand the reading well enough. When they can carry both ends of the conversation, they also are pleased.

I am trying to foster a direct transaction, about the videotaped lessons, between the students' prior ideas and the ideas they discover in their readings. However, I try not to define or conduct that transaction as a confrontation. Rather, I represent the course to the students as a program that can help *them* to identify and review the ideas they brought with them so that they can decide whether they want to agree with themselves. Similarly, I describe the videotaped lessons and course readings as *options* for thinking and talking about schoolteaching. The written conversations confirm this definition of the situation. To write good conversations, the students must learn how to argue in the manner of Lampert and the other authors, but they also preserve their option to say what they think through the voices of Experienced Student and Inexperienced Teacher. The conversations tend to leave issues open and arguments unfinished, as seems appropriate for an introductory course.

Coping With the Students' Subjective Warrant to Teach

Dan Lortie has argued that schoolteachers are different from members of other occupations in that their preparatory education in the university makes no substantial break in careers that began when they entered kindergarten. Teachers in his sample, he reported, place events which preceded their formal preparation within a continuous rather than a discontinuous framework. Thus, when they describe their former teachers they do not contrast their "student" perceptions with a later, more sophisticated viewpoint. They talk about assessments they made as youngsters as currently viable and stable judgments of quality (Lortie, 1975).

The youngsters who enter my introductory course seem to anticipate that continuity. The confidence with which they criticize the work of the experienced teachers in the videotapes and quarrel with the scholars who wrote the course reading shows their "subjective warrant" to teach (Lortie, 1975). I suppose that warrant is quite valuable to them and that they will not part with it lightly. If and when my course calls their judgments into question, it also compromises their warrant. When they are gaining ground toward teaching, in my estimate, they may be losing ground in their estimate. They have powerful reasons to reject the unfamiliar teaching method that I show them and the unfamiliar arguments that I ask them to read. Relative to their extensive experience and its subjective value to them, I and the authors of the readings are in weak positions.

By engaging students in conversations where they must show understanding in my terms but are free to preserve understanding in their terms, I hope to introduce some images, ideas, and vocabulary into the students' thinking, but without forcing a contest that I and the authors of the course reading—and the students—are likely to lose. I hope to provide them opportunities to change their minds while preserving their warrant--by shifting their confidence from what they already know to their ability to participate in educational conversation.

Making a Virtue of Necessity?

While I had formed my strategy mostly as an adaptation to my weak position, I have begun to think recently that it has more affirmative virtues. In her study of the thoughts and thought processes of some preservice teachers, Diane Holt-Reynolds (1990) found that they were already engaged in a vicarious and untutored form of reflective practice. Every preservice teacher in her study, she reports, employed a conversation with Self as Student as a primary strategy for thinking about and, thus, evaluating the potential merit of research-based instructional strategies. Their conversations are, in effect, a naturally occurring, lay form of reflection not unlike the professional, acquired forms of reflection suggested by Schon (1988) as an important practitioner skill.

While Holt-Reynolds found, as Lortie argued, that the preservice teachers' theories of teaching were shaped by their position as students in school, and while she concluded that those theories often would be unhelpful in teaching, she nevertheless argued that teacher educators should cultivate their students' reflective habits. "We must develop ways of interacting with preservice teachers," she says, "that cooperate with the strategies they are already using for discovering their voices as Teacher" (Holt-Reynolds, 1990, p. 34).

Holt-Reynolds's report on preservice teachers' thought *processes* tempts me into a parallel speculation regarding the *form* of their knowledge. Recently, Walter Doyle has argued that teachers acquire "classroom knowledge" that is adapted and essential to classroom teaching and that deserves to be identified, documented, and treated as a "foundation" of a teacher's education (Doyle, 1990). Doyle argues that such classroom knowledge is "event-structured," that is, organized by instances of teaching particular subjects to particular students in particular times and places. Classroom knowledge, he argues, is case knowledge. When I consider my students' reactions to the videotapes and reading in my introductory class, I am inclined to think that their conceptions of lesson teaching might usefully be discussed and treated in much the same way, as event-structured knowledge that

is built up through experience in classrooms and organized about instances involving particular subject matters, students, rooms, materials, and teachers.

I should hasten to say that I am not simply endorsing my students' subjective warrant to teach. Like their reflective processes, I suppose, students' case knowledge is untutored and strongly shaped by their opportunities to observe and participate. There is a large difference between the students' position and the teacher's position in the classroom, and the student's participation in *teaching* is imaginary, not real (Lortie, 1975). Those considerations alone would rule out any simple endorsement of the student's feeling of competence to teach.

Granting that my students' subjective warrant should not go unchallenged, what should I do about the situation? I cannot see that a strong dose of typical educational literature is the remedy. Why should I require would-be teachers to abandon case reasoning, which arguably is adapted to teaching work, for more generalized and abstract reasoning that arguably is better adapted to the environment of the university? If I am working with the student's rendition of reflective practice and with the student's rendition of event-structured classroom knowledge, and if I regard those as useable materials rather than hindrances, it follows that I would want both to tutor their reflection and to challenge, refine, and expand their case knowledge. Asking them to write conversations with the authors of their reading about videotapes of teaching still seems a promising way to go about that.

References

Anderson, C. W. (1987, April). *Three perspectives on cognition and their implications for science teaching.* Paper presented at the annual meeting of the American Educational Research Association, Washington, DC.

Dewey, J. (1938). *Experience and education.* New York: Macmillan.

Dewey, J. (1964). The relation of theory to practice in education. In R. D. Archambault (Ed.), *John Dewey on education: Selected writings* (pp. 313-338). Chicago: University of Chicago Press.

Doyle, W. (1990). Classroom knowledge as a foundation for teaching. *Teachers College Record, 91*, 347-360.

Hawkins, D. (1974). I, thou, and it. In *The informed vision: Essays on learning and human nature* (pp. 48-62). New York: Agathon Press.

Holt-Reynolds, D. (1990, October). *Entering preservice teachers' internal dialogues: The power of reflection to shape practical argument. Part 1: Changing the discourse of reflection.* Paper presented at the 12th Conference on Curriculum Theorizing and Classroom Practice, Dayton, OH.

Lampert, M. (1985). Mathematics learning in context: "The voyage of the Mimi." *Journal of Mathematical Behavior, 4*, 157-167.

Lortie, D. C. (1975). *Schoolteacher: A sociological study.* Chicago: University of Chicago Press.

Rosenshine, B., & Stevens, R. (1986). Teaching functions. In M. C. Wittrock (Ed.), *Handbook of research on teaching* (3rd ed., pp. 376-391). New York: Macmillan.

Schon, D. A. (1988). Coaching reflective teaching. In P. P. Grimmett & G. L. Erickson (Eds.), *Reflection in teacher education* (pp. 19-30). New York: Teachers College Press.

Shulman, L. S. (1987). Knowledge and teaching: Foundations of the new reform. *Harvard Educational Review, 57*, 1-21.